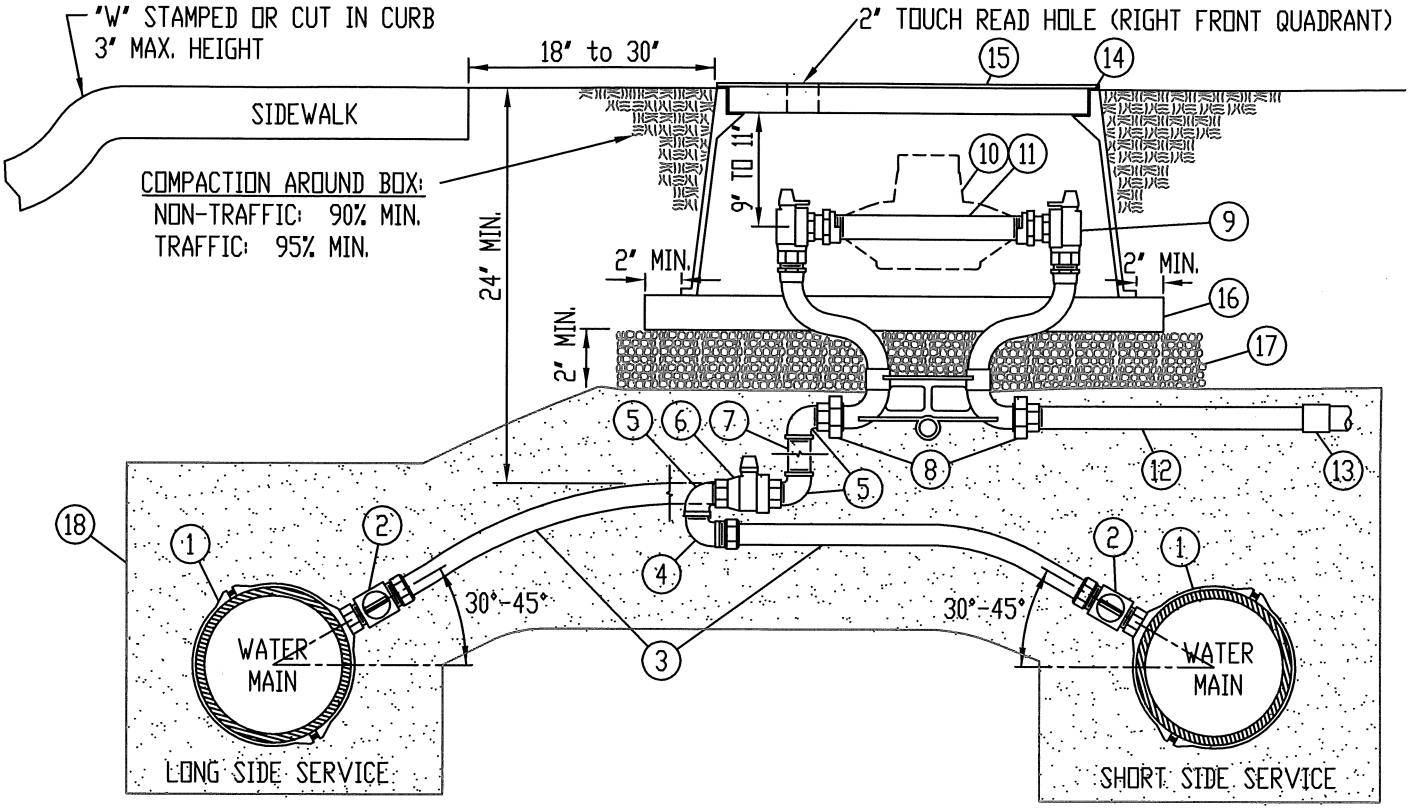


CARSON 1220-4B "T" TYPE LID:
SHALL INCLUDE STRAIGHT TYPE HEXAGON LOCK-DOWN BOLT (1) AND TOUCH READ HOLE. SHALL BE MARKED "WATER"

CHRISTY FL30T RECESSED LID:
SHALL INCLUDE STRAIGHT TYPE PENTAHEAD LOCK-DOWN BOLTS (2) AND TOUCH READ HOLE. SHALL BE MARKED "WATER"

METER YOKE:
FORD, JONES, MUELLER, McDONALD

| | | | | | |
|---|---|---|---|---|---|
| 1 | 1" BRONZE SADDLE - IPT | 10 | 1" WATER METER (BY DISTRICT) | | |
| 2 | 1" CORPORATION STOP - FULL-PORT BALL, MIP x IPS COMP | 11 | PVC METER IDLER - 1 1/4" x 10 3/4", SCH 80 (BY CONTRACTOR) | | |
| 3 | 1 1/4" COPPER TUBING - TYPE K SOFT | 12 | 1" x 18" PVC NIPPLE - SCH 80 (BRASS IF BACKFLOW) | | |
| 4 | 1" BRASS STREET ELBOW - IPS COMP x MIP | 13 | 1" PVC COUPLING - SCH80 | | |
| 5 | 1" BRASS STREET ELBOW | | | NON-TRAFFIC AREAS | TRAFFIC AREAS |
| 6 | 1" VALVE - FULL-PORT BALL, FIP x FIP or IPS COMP x FIP | 14 | METER BOX | CARSON 1220-12 | CHRISTY FL30TBOX12 |
| 7 | 1" BRASS or COPPER (AS NECESSARY TO ADJUST TO PROPER GRADE) | 15 | LID | CARSON 1220-4B | CHRISTY FL30T |
| | | 16 | 2" x 6" PRESSURE TREATED DOUGLAS FIR SUPPORTS (2) | | |
| 8 | 1" DUAL PURPOSE CONNECTION | 17 | 3/4" CLEAN CRUSHED ROCK | | |
| 9 | 1" COPPER/BRASS METER YOKE - 12" HEIGHT w/2 FULL-PORT ANGLE BALL VALVES INCLUDING PADLOCK WINGS ON INLET AND OUTLET | 18 | #2 WASHED SAND COMPACTED TO 90% | | |

CITRUS HEIGHTS WATER DISTRICT

# 1 1/4" COPPER WATER SERVICE - 1" WATER METER NEW CONSTRUCTION

## CITRUS HEIGHTS WATER DISTRICT

APPROVED BY: Robert A. Chenoweth DATE: 9/25/14
CITRUS HEIGHTS WATER DISTRICT

DRAWN: 25 SEP 2014
REVISED:
SCALE: N.T.S.
DESIGN: P.A.D.
CAD FILE: WS_125CU.DWG
PAGE: WS_125CU